TECHNICAL DATA

Three Phase Electric Motors - Aluminum Frame
UM2A 132S2-2
7.5 kW / 10 Cv
2930 RPM

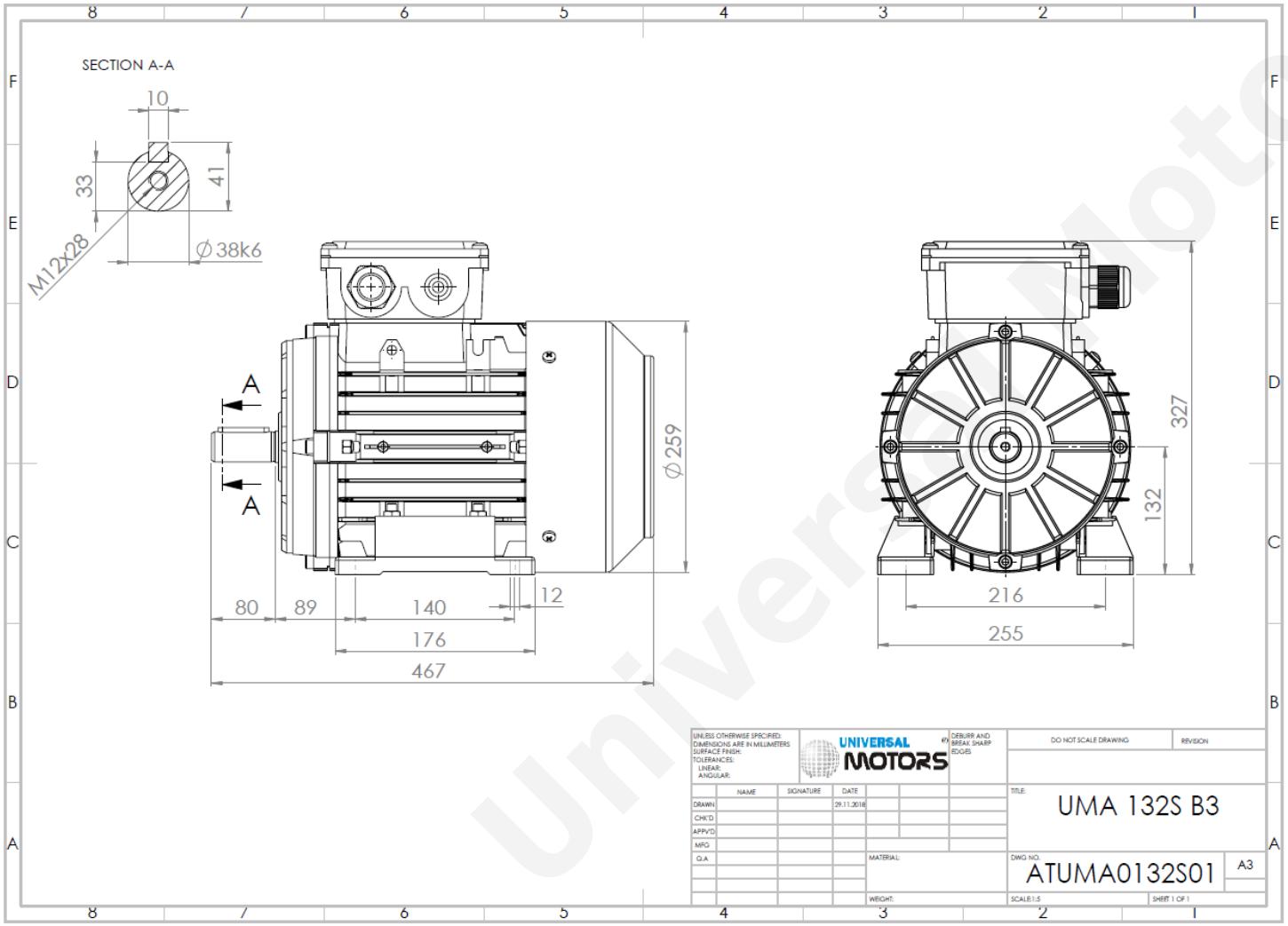

Motor type:	**UM2A 132S2-2**
Output:	**7.5 kW / 10 Cv**
Speed (min^{-1}):	**2930 RPM**
Frequency:	**50 Hz**
Voltage:	**400 V**
Current:	**13.5 A**
Power factor (Cos Ø):	**0.91**
Poles:	**2**
Insulation class:	**F**
Temperature rise Class:	**B**
Efficiency 50%:	**87.9 %**
Efficiency 75%:	**88.6 %**
Efficiency 100%:	**88.1 %**
Torque:	**25 N.m**
Tstarting/Tnominal:	**2.5**
Istarting/Inominal:	**9.8**
Tmaximum/Tnominal:	**3.5**
Noise:	**80 Db(A)**
Weight:	**47.3 Kg**
Brake AC:	**AC7**
Torque Brake DC:	**80 N.m**
Bearing DE:	**6308 2Z**
Bearing NDE:	**6208 2Z**
Torque Brake AC:	**90 N.m**
Brake DC:	**REB-05-16**

Regime - S1 **Altitude - 1000m** **Environment Temperature - 40ºC**

* References applied only in the UK

CONTACTS:

UNIVERSAL MOTORS
Rua de São Brás,745
4480-782 VILA DO CONDE
Tel: +351 252 299 080
Fax: +351 252 299 089
Mail: geral@universalmotors.pt

Universal Motors